版次 REV.	修訂 REVISIONS 記述 DESCRIPTION	日期 DATE

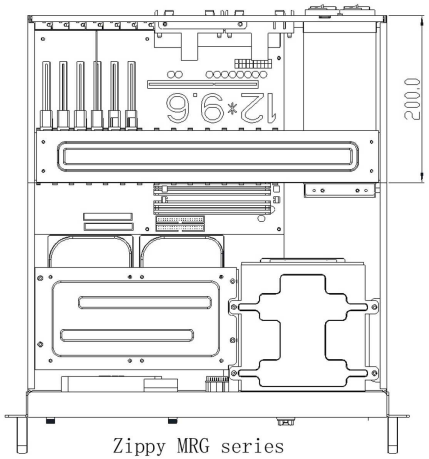

Zippy MRG series
RPS depth at 200mm

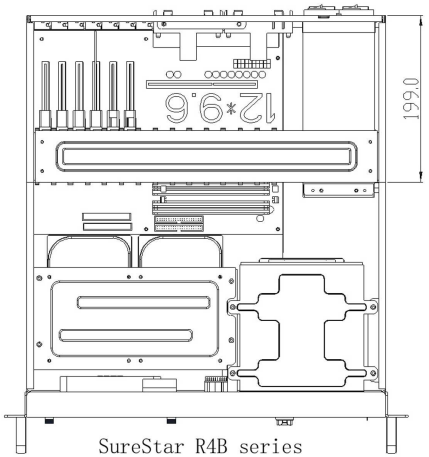

SureStar R4B series
RPS depth at 199mm

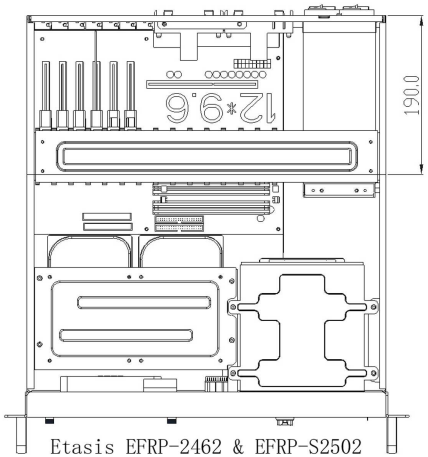

Etasis EFRP-2462 & EFRP-S2502
RPS depth at 190mm

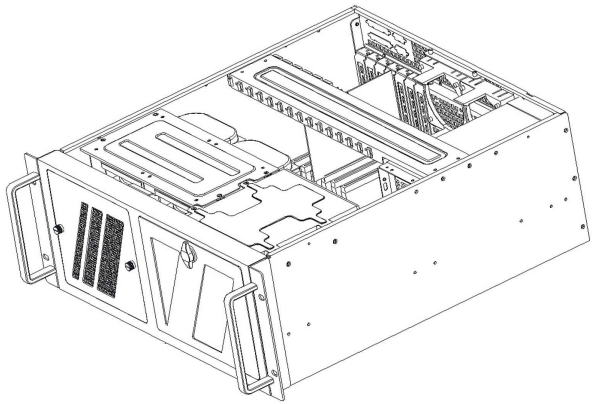

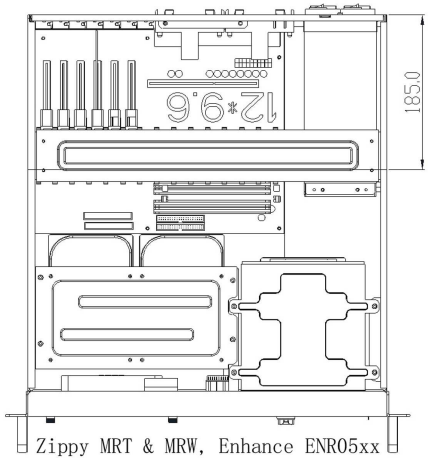

Zippy MRT & MRW, Enhance ENR05xx
RPS depth at 185mm

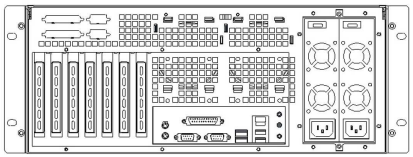

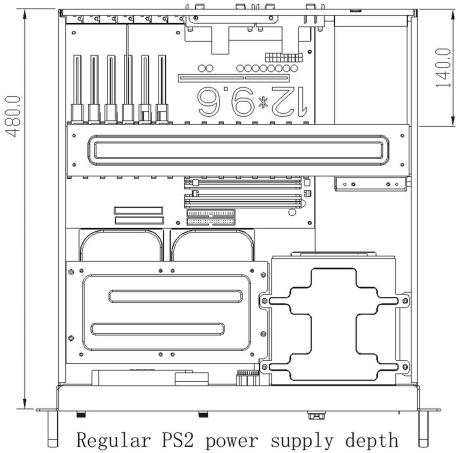

Regular PS2 power supply depth
at 140mm~220mm compatible

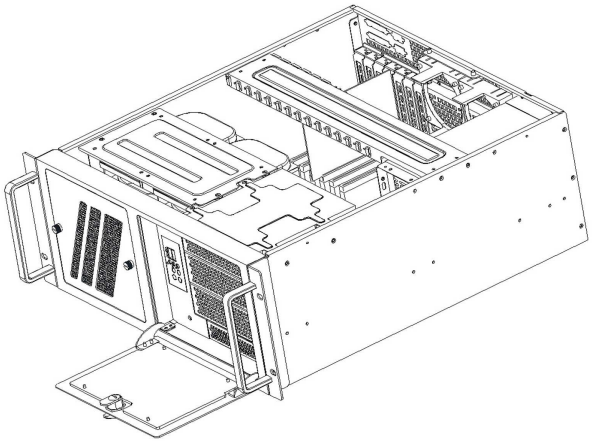

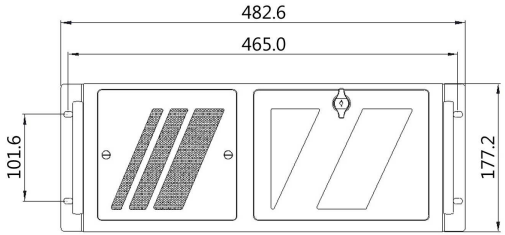

容許公差: TOLERANCES: .XXX ±.025 .XX ±.100 .X ±.250	材料規格: MATERIAL:	SGCC 1.2mm as main mechanism		品名: NAME:	4U black (beige) eATX rackmount server chassis
	核准者: APPROVE BY:	Robert Roan	日期: DATE: June 21, 2019	料號: PART NO:	C480A (C480AW)
投影法: PROJECTION: 第三角法	審核者: CHECK BY:	Jun Chen	日期: DATE: June 21, 2019	圖號: DRAW NO:	檔號: FILE NO: C480A-20190621
	繪圖者: DRAW BY:	Danny Chih	日期: DATE: June 21, 2019	單位: UNITS: mm	版次: REV. NO: 1.0 規格: SPEC.: 編號: SHEET:

Genesys Group® 台灣工控有限公司 genesysgroup.com.tw